GLOBAL-KING
International Co., Ltd.

Global-King Network Camera

AI 12X PTZ Dome Network Camera

Feature

Model：GK2971C-X12-R(T)PE

Feature

- NDAA Compliance
- AI Deep Learning
- 0~360° Pan Range, 350°/s Pan Speed
- -5°~90° Tilt Range, 360°/s Tilt Speed
- PTZ Auto Tracking
- 12X Optical Zoom
- Smart IR II with 160m IR Distance
- 90fps /60fps High Frame Rate
- Recessed Installation

Specification

Products Specification

Model	GK2971C-X12-R(T)PE
Image Sensor	1/2.8" Progressive Scan SONY CMOS
Min. Illumination	Color：0.005Lux @F1.6 ｜ B/W：0Lux with IR on
WDR	140dB Super WDR
Shutter Time	1~1/100,000s
DORI Distance	D：82.5~996m ｜ O：32.5~392m ｜ R：16~196m ｜ I：8~99m
Day/Night Mode	Day ｜ Night ｜ Auto ｜ Customize ｜ Schedule
S/N	>55dB
Digital Zoom	16x
Lens	5.3~64mm ｜ 12x Optical Zoom
Zoom Speed	Approx. 4s (Wide-Tele)
Field of View	H61°~H4.8° ｜ D69°~D5.7° ｜ V36°~V2.8°
Focus Control	Auto ｜ Semi-Auto ｜ Manual
Minimum Working Distance	1000/1500mm (Wide/Tele)
Aperture	F1.6~F2.8
Iris Control	Auto
Pan Range/Pan Speed	360° endless ｜ Pan Manual Speed：0.1°~350°/s ｜ Pan Preset Speed：350°/s
Tilt Range/Tilt Speed	-5°~90° (Auto Flip) ｜ Tilt Manual Speed：0.1°~360°/s ｜ Tilt Preset Speed：360°/s
Proportional Zoom	Support
Preset Quantity	300
Patrol	8 Patrols, up to 48 presets each patrol
Pattern	4 Patterns
Auto Tracking	Support
Power Off Memory	Support

Other Function	Auto Scan｜Auto Home｜Preset Freezing｜3D Positioning｜PTZ Limits｜Initial Position
IR Distance	Up to 160M
Irradiation Angle	Auto｜Manual
Resolution	1920(H) x 1080(V)
Primary Stream	60Hz：90fps@(1920x1080)(Optional for T Series)｜60fps@(1920x1080｜1280x960｜1280x720｜704x576) 50Hz：90fps@(1920x1080)(Optional for T Series)｜50fps@(1920x1080｜1280x960｜1280x720｜704x576)
Secondary Stream	60Hz: 60fps@(704x576｜640x480｜640x360｜352x288｜320x240) 50Hz: 50fps@(704x576｜640x480｜640x360｜352x288｜320x240)
Tertiary Stream	60Hz: 30fps@(1920x1080｜1280x720｜704x576｜640x480｜640x360｜320x240) 50Hz: 25fps@(1920x1080｜1280x720｜704x576｜640x480｜640x360｜320x240)
Video Compression	H.265+｜H.265(HEVC)｜H.264+｜H.264｜MJPEG
Video Bit Rate	16Kbps~16Mbps (CBR/VBR adjustable)
Privacy Masking	Up to 8 Areas (Mask Area and Mosaic Area are optional)
ROI	Up to 8 areas
Image Setting	Brightness｜Contrast｜Saturation｜Sharpness
Image Enhancement	BLC｜HLC｜2D DNR｜3D DNR｜AGC｜Defog｜AWB｜Deblur｜Anti-flicker｜Corridor Mode｜LDC
Ethernet	1xRJ45 10M/100M Ethernet Port
Audio I/O	1CH｜1CH
Alarm I/O	1CH｜1CH
Network Storage	NAS (Support NFS /SMB /CIFS)｜ANR
Network Protocols	IPv4/IPv6｜ARP｜TCP｜UDP｜RTCP｜RTP｜RTSP｜RTMP｜HTTP｜HTTPS｜DNS｜DDNS｜DHCP｜FTP｜NTP｜SMTP｜SNMP｜ UPnP｜LLDP｜Bonjour｜SIP｜VPN｜PPPoE｜VLAN｜802.1x｜QoS｜IGMP｜ICMP｜SSL｜TLS1.2
Audio Compression	G.711｜AAC｜G.722｜G.726
Audio Sampling Rate	8 /16 /32 /44.1 /48KHz

Audio Bit Rate	16~256kbps
Video Analysis	VCA 2.0：Intrusion Detection｜Region Entrance｜Region Exiting｜Advanced Motion Detection｜Line Crossing｜Loitering｜Object Left｜Object Removed
Attribute Extraction	Simultaneously detect up to 50 targets and capture humans and vehicles in real time｜Recognize attributes including Upper and Lower Clothing Color, Hat, and Vehicle Types (Bicycle｜Car｜Motorcycle｜Bus｜Truck｜E-scooter)
Face Detection & Face Attribute Recognition	Detect and capture faces, get real-time snapshots｜The attributes include Age, Gender, Glasses, Mask and Cap; Support Faces Privacy Mode, the detected faces in the face detection area will be mosaic automatically
Object Counting & Report	Count the number of objects crossing the line, optionally human and vehicle, Support regional people counting for up to 4 detection areas
Basic Event	Motion Detection｜Tamper Detection｜External Input, External Output｜Audio Alarm, etc.
Exception	Network Disconnection｜IP Address Filtering｜Record Failed｜SD Card Full｜SD Card Uninitialized｜SD Card Error｜No SD Card
Event Action	FTP Upload Record｜SMTP Upload Record｜SD Card Record｜Snapshot｜External Output｜Play Audio｜SIP Phone｜PTZ Motion｜HTTP Notification, etc.
Watermark	Support
Storage	Support microSD/SDHC/SDXC Card Local Storage｜up to 1TB
SIP/VoIP	Yes｜Voice & Video-over-IP
System Compatibility	ONVIF Profile G & M & S & T｜API
Temperature	-40ºC~60ºC
Humidity	0~95%(Non-condensing)
Power Supply	PoE(802.3at)｜DC 12V3A±10%
Power Consumption	Min.：7.1W (DC12V)｜8.6W (PoE) Max.：15W (DC12V)｜17W (PoE)
Surge Protection	4KV
Dimensions	⌀183 x 174.8 mm
Weight	2.6Kg

Certification	CE | FCC | IP66 | IK10 | NDAA

Information correct as of print.
Slight specification variations may occur due to product enhancement to optimize functionality

Accessories

Product Accessories

A02 V2 Pole Mount

Weight: 1kg
Dimension: 180*138.5*47mm
Installation Environment: For strapping cameras on poles between ϕ67–127 mm (2.6–5 inches) in diameter

A03 External Corner Bracket

Weight: 900g
Dimension: 180*152.5*76mm
Installation Environment: For mounting cameras on an external corner

A42-L Extension Lever

Weight: 330g
Dimension: Φ 47.5*255mm
Installation Environment: Used as extensions for pendant mount

A43 Junction Box

Weight: 1000g
Dimension: 195*164*80mm
Installation Environment: For the containing of electrical connections which need to be concealed from sight and deter tampering

AC-71 Smoked Dome Cover

Weight: 120g
Dimension: Φ136.8*92.5mm
Installation Environment: For concealing where a camera is pointed

A77 Wall Mount

Weight: 650g
Dimension: 262*185*138mm
Installation Environment: For wall or parapet installations

A78 Recessed Mount

Weight: 715g
Dimension: Φ256*94mm
Installation Environment: For in-ceiling installations

A79 Pendant Mount

Weight: 850g
Dimension: Φ 185*295mm
Installation Environment: Used to install cameras on a ceiling or horizontal structure

Dimension

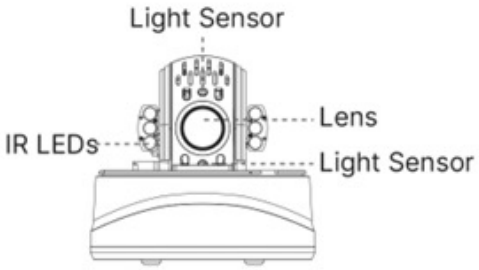

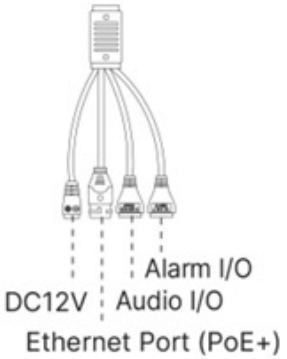

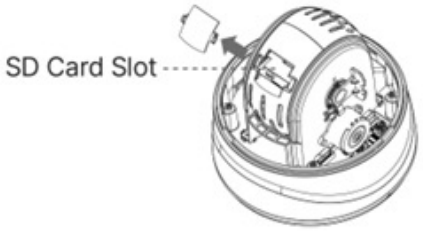

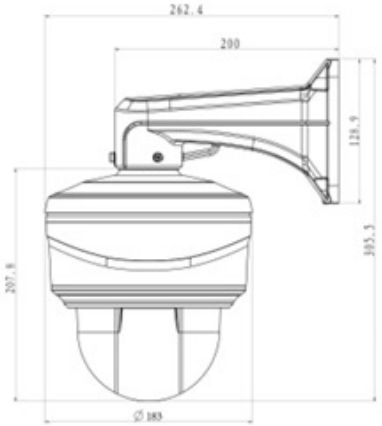

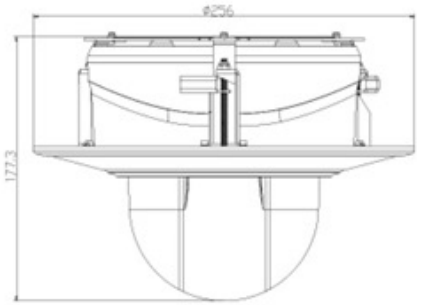

AI 12X PTZ Dome Network Camera | Dimensions

Architecture diagram

AI 12X PTZ Dome Network Camera | Infrastructure

- IP Camera (GK2971C-X12-R(T)PE)
- Switch HUB (PoE)
- NVR
- VMS Software
- APP (iOS&Android)
- Internet (ISP modem)

Infrastructure

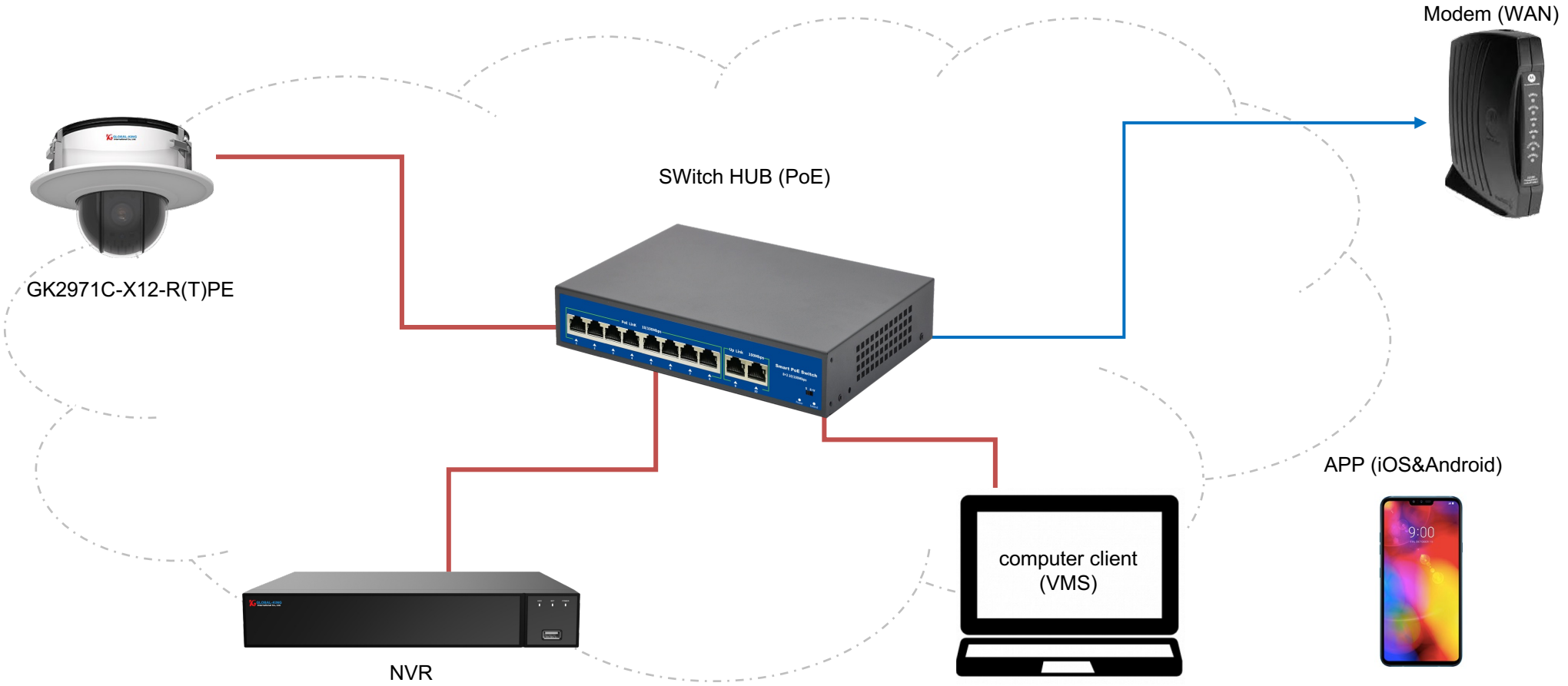

AI 12X PTZ Dome Network Camera | Infrastructure

Thank You

2026/3/4

+886-2-77303779

service@global-king.com

www.global-king.net