

GLOBAL-KING
International Co., Ltd.

Global-King TrafficX IPCAM

Dual Vision TrafficX Enforcement Camera



Feature

Model : GK5511TS-GH

Feature

- Products that meet NDAA Defense Authorization Act standards
- High-performance AI Chip and AI ISP Embedded
- Multiple Traffic Light Detection Methods：Based on Image or Signal Inputs
- Accurately Capture Video Evidence of Vehicles that Run Red Lights
- Dual-lens for Overview and ANPR Image
- 99% Capture Rate & 98% Plate Recognition Rate
- 2x5MP Auto Focus Lenses
- 50m ANPR Distance & 2-3 Lanes Covering
- Support 1TB SD Card for Edge Storage
- 4G LTE Network for Wireless Transmission (Optional)
- Built-in GPS for Precise Location



Specification

Products Specification

Model	GK5511TS-GH
Image Sensor	Color 2/3" Global Shutter
Min. Illumination	Color：0.001Lux@F1.4 | B/W：0Lux with IR on
Shutter Time	30us ~ 40000us
Day/Night Mode	Day | Night | Auto
Supplement Light	16 Pcs
Illumination Distance	Up to 60m
Supplement Light	IR：IR Strobe Light (9 light beads @ 850nm | 16 light beads @ 740nm) IR Distance：60m IR Wave Length：850nm (Default) | 740nm (Optional)
Road Traffic Management	
Max. ANPR Range	Up to 50m
Max. Vehicle Speed	250 km/h
Coverage	Recommended for 2~3 lanes
Capture Rate	Up to 99%
Recognition Accuracy	Up to 98%
Country Region Supported	More than 74 countries and regions
Attributes Identification	Plate Color | Vehicle Type | Vehicle Color | Vehicle Brand | No-plate | Vehicle Capture
Violation Management	Red Light Running | Cross Line at Red Light | Minimum Red Time for Valid violation | Reverse Driving | Vehicle Attributes Event Detection
White/Black List	Up to 2000 records inside the camera
LPR Smart Search	Support
Image Capture	Stores 6 overview snapshots and 2 LPR snapshots per violation
Logs	Log and filter the type of each violation as CONFIRMED | INVALID | FALSE START | STOPPED and UNKNOWN
Interface	

Ethernet	1xRJ45 10M/100M/1000M Ethernet Port
RS485	Support
Input	4xOptoisolated Input
Output	2xStrobe Output | 1xRelay Output
Lens	
Lens	15-50mm | Motorized zoom and focus
Mount	Custom mount
Field of View	Horizontal FOV 41.4° to 10.3° | Vertical FOV 26.8° to 8.42° | Diagonal FOV 32° to 13.3°
Video	
Max. Resolution	2464(H) x 2056(V)
Max. FPS	45fps
Video Compression	H.265 | H.264 | MJPEG
Video Bit Rate	16Kbps~16Mbps (CBR/VBR Adjustable)
Image Setting	Brightness | Contrast | Saturation
Privacy Masking	Supports up to 8 mosaic areas per sensor
Wireless Network (Optional)	
Cellular	4G LTE NA: B2/B4/B5/B12/B13/B25/B26 | EU: B1/B3/B7/B8/B20/B28 | AU: B1/B2/B3/B4/B5/B7/B8/B28/B66
SIM Card	Nano SIM
System	
System Compatibility	API | HTTP | TCP | MQTT | ONVIF Profile G & S & T
Storage	Support microSD/SDHC/SDXC Card Local Storage | up to 1TB
Language Support	Chinese | English | Arabic | Greek | Support customization

Encryption Protocol	FIPS 186
General	
GPS	Built-in High-accuracy GPS Module
Working Temperature	-40ºC~70ºC
Working Humidity	0~95% (Non-condensing)
Power Consumption	22W MAX｜26W MAX (With IR on)
Housing	Vandal-proof IK10-rated metal housing｜Up to IP67-rated for Weather-resistant Performance
Power Supply	24V DC/AC
Weight	4300g
Dimensions	121 x 295 x 245mm｜(Without Mounting Bracket)
Product Certification	CE｜FCC｜NDAA｜IP67｜IK10

Information correct as of print.
Slight specification variations may occur due to product enhancement to optimize functionality

Accessories

Product Accessories



A02 V2 Pole Mount

Weight: 1kg
Dimension: 180*138.5*47mm
Installation Environment: For strapping cameras on poles between ϕ67–127 mm (2.6–5 inches) in diameter



A91-N Pedestal Mount

Weight: 540g
Dimension: 80*80*104.5mm
Installation Environment: For installation on a base or platform



A92-N Wall Mount

Weight: 1800g
Dimension: 140*200*279mm
Installation Environment: For wall or parapet installations

Dimension



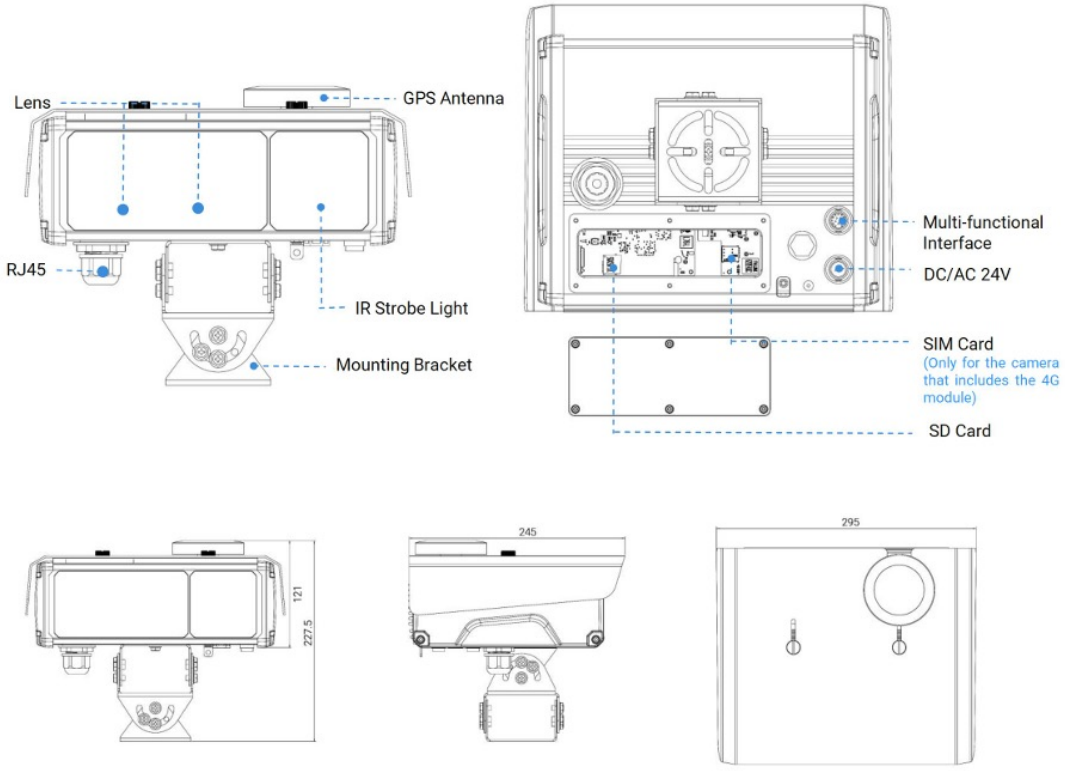

Dual Vision TrafficX Enforcement Camera | Dimensions

Architecture diagram

Dual Vision TrafficX Enforcement Camera | Infrastructure

- IP Camera (GK5511TS-GH)
- Switch HUB (PoE)
- NVR
- VMS Software
- APP (iOS & Android)
- Internet (ISP modem)

Infrastructure

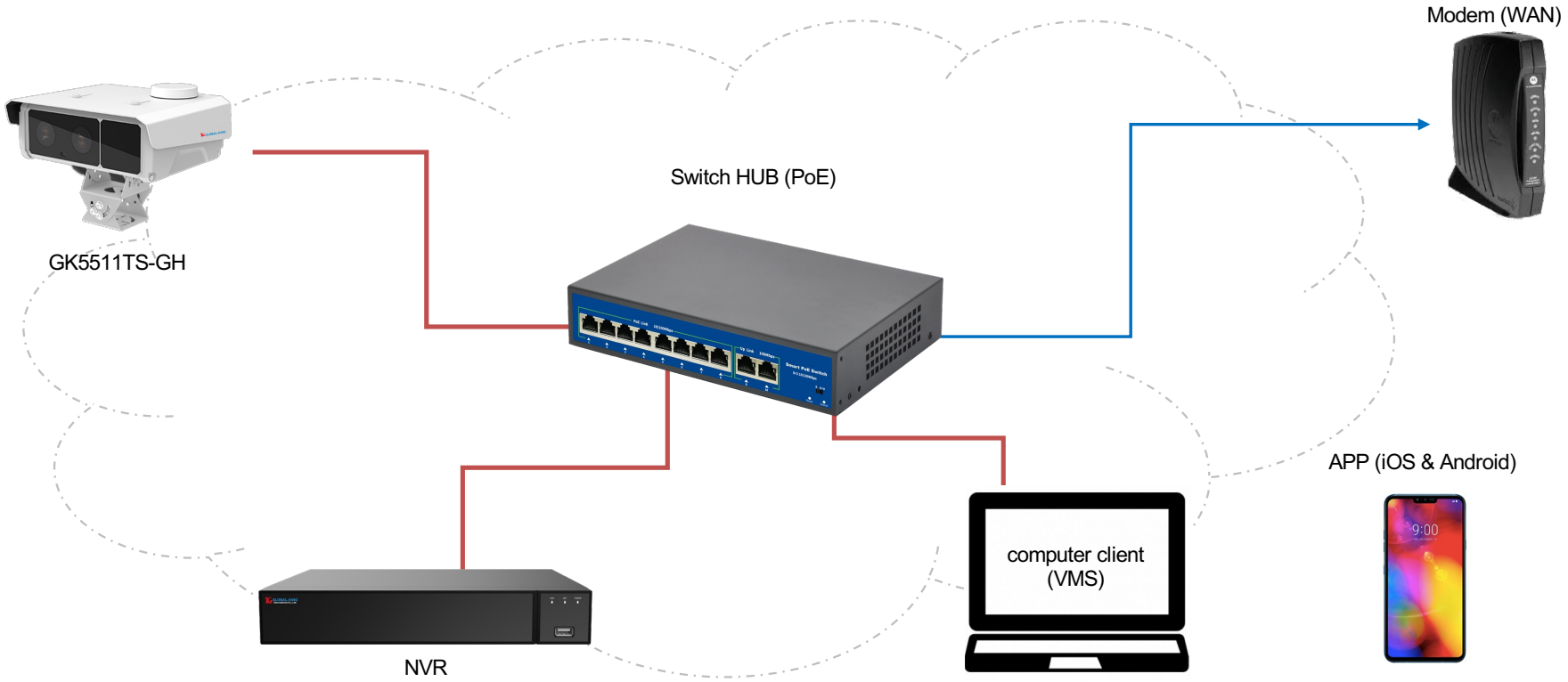

Dual Vision TrafficX Enforcement Camera | Infrastructure



ThankYou

2026/4/9

+886-2-77303779

service@global-king.com

www.global-king.net

GLOBAL-KING
International Co, Ltd.