GLOBAL-KING
International Co., Ltd.

Global-King Network Camera

AI 23X PTZ Bullet Network Camera

Feature

Model：GK5367C-X23-PE

Feature

- NDAA Compliance
- AI Deep Learning
- Flexible Pan, Tilt and Zoom Tasks
- PTZ Auto Tracking
- 23X Optical Zoom
- 1/2.8" STARVIS Sensor
- 5M Viewing Experience
- Smart IR II with 180m IR Distance
- 30fps High Frame Rate

Specification

Products Specification

Model	GK5367C-X23-PE
Image Sensor	1/2.8" Progressive Scan SONY CMOS
Min. Illumination	Color: 0.008Lux @F1.5 | B/W: 0Lux with IR on
WDR	120dB Super WDR
Shutter Time	1~1/100,000s
DORI Distance	D：114~2280m | O：45~898m | R：22.5~449m | I：11~224m
IR Distance	Up to 180M
Digital Zoom	16x
Day/Night Mode	Day | Night | Auto | Customize | Schedule
S/N	>55dB
Lens	5~117mm | 23x Optical Zoom
Zoom Speed	Approx. 6s (Wide-Tele)
Field of View	H55°~H2.8° | D68°~D3.2° | V42°~V1.5°
Focus Control	Auto | Semi-Auto | Manual
Minimum Working Distance	1000/1500mm (Wide/Tele)
Aperture	F1.5~F3.5
Iris Control	Auto
Pan Range/Pan Speed	360° endless | Pan Manual Speed: 0.1°~50°/s | Pan Preset Speed: 50°/s
Tilt Range/Tilt Speed	-45°~30° | Tilt Manual Speed：0.1°~30°/s | Tilt Preset Speed：30°/s
Proportional Zoom	Support
Preset Quantity	300
Patrol	8 Patrols, up to 48 presets each patrol
Pattern	4 Patterns
Auto Tracking	Support

Power Off Memory	Support
Other Function	Auto Scan | Auto Home | Preset Freezing | 3D Positioning | PTZ Limits | Initial Position
Resolution	2592(H) x 1944(V)
Primary Stream	60Hz：30fps@(2592x1944 | 2592x1520) | 45fps@(2048x1536) | 60fps@(1920x1080 | 1280x960 | 1280x720) 50Hz：25fps@(2592x1944 | 2592x1520) | 45fps@(2048x1536) | 50fps@(1920x1080 | 1280x960 | 1280x720)
Secondary Stream	60Hz：30fps@(704x576 | 640x480 | 640x360 | 352x288 | 320x240) 50Hz：25fps@(704x576 | 640x480 | 640x360 | 352x288 | 320x240)
Tertiary Stream	60Hz：30fps@(2048x1536 | 1920x1080 | 1600x1200 | 1280x720 | 704x576 | 640x480 | 640x360 | 320x240) 50Hz：25fps@(2048x1536 | 1920x1080 | 1600x1200 | 1280x720 | 704x576 | 640x480 | 640x360 | 320x240)
Video Compression	H.265+ | H.265(HEVC) | H.264+ | H.264 | MJPEG
Video Bit Rate	16Kbps~16Mbps (CBR/VBR adjustable)
Privacy Masking	Up to 8 Areas (Mask Area and Mosaic Area are optional)
ROI	Up to 8 areas
Image Setting	Brightness | Contrast | Saturation | Sharpness
Image Enhancement	BLC | HLC | 2D DNR | 3D DNR | AGC | Defog | AWB | Deblur | Anti-flicker | Corridor Mode | LDC
Ethernet	1xRJ45 10M/100M Ethernet Port
Audio I/O	1CH | 1CH
Alarm I/O	1CH | 1CH
Network Storage	NAS (Support NFS /SMB/CIFS) | ANR
Network Protocols	IPv4/IPv6 | ARP | TCP | UDP | RTCP | RTP | RTSP | RTMP | HTTP | HTTPS | DNS | DDNS | DHCP | FTP | NTP | SMTP | SNMP | UPnP | Bonjour | LLDP | SIP | VPN | PPPoE | VLAN | 802.1x | QoS | IGMP | ICMP | SSL | TLS 1.2
Audio Compression	G.711 | AAC | G.722 | G.726
Audio Sampling Rate	8 /16 /32 /44.1 /48KHz
Audio Bit Rate	16~256kbps

Video Analysis	VCA 2.0：Intrusion Detection｜Region Entrance｜Region Exiting｜Advanced Motion Detection｜Line Crossing｜Loitering｜Object Left｜Object Removed
Attribute Extraction	Simultaneously detect up to 50 targets and capture humans and vehicles in real time｜Recognize attributes including Upper and Lower Clothing Color, Hat, and Vehicle Types (Bicycle｜Car｜Motorcycle｜Bus｜Truck｜E-scooter)
Face Detection & Face Attribute Recognition	Detect and capture faces, get real-time snapshots｜The attributes include (Age｜Gender｜Glasses｜Mask｜Cap)
Object Counting & Report	Count the number of objects crossing the line, optionally human and vehicle｜Support regional people counting for up to 4 detection areas
Basic Event	Motion Detection｜Tamper Detection｜External Input (Optional)｜External Output (Optional)｜Audio Alarm (Optional), etc.
Exception	Network Disconnection｜IP Address Filtering｜Record Failed｜SD Card Full｜SD Card Uninitialized｜SD Card Error｜No SD Card
Event Action	FTP Upload Record｜SMTP Upload Record｜SD Card Record｜Snapshot｜External Output (Optional)｜Play Audio (Optional)｜SIP Phone｜White LED｜PTZ Motion｜HTTP Notification, etc.
Watermark	Support
Storage	Support microSD /SDHC /SDXC Card Local Storage｜up to 1TB
SIP/VoIP	Voice｜Video-over-IP
System Compatibility	ONVIF Profile G & M & S & T｜API
Temperature	-40ºC~60ºC
Humidity	0~90%(Non-condensing)
Power Supply	PoE(802.3at)｜DC12V3A±10%
Power Consumption	Min.：11.2W (DC12V) ｜13.3W (PoE) Max.：19.7W (DC12V) ｜25W (PoE)
Dimensions	110 x 337 x 220 mm
Weight	Approx. 2.9Kg
Certifications	CE｜FCC｜IP67｜NDAA

Information correct as of print.
Slight specification variations may occur due to product enhancement to optimize functionality

Accessories

Product Accessories

A02 V2 Pole Mount

Weight: 1kg
Dimension: 180*138.5*47mm
Installation Environment: For strapping cameras on poles between 102-127mm(4.1-5 inches) in diameter

A03 External Corner Bracket

Weight: 900g
Dimension: 180*152.5*76mm
Installation Environment: For mounting cameras on an external corner

A62 Junction Box(Only for Wall Mount Version)

Weight: 510g
Dimension: 134*126*40mm
Installation Environment: For the containing of electrical connections which need to be concealed from sight and deter tampering

Dimension

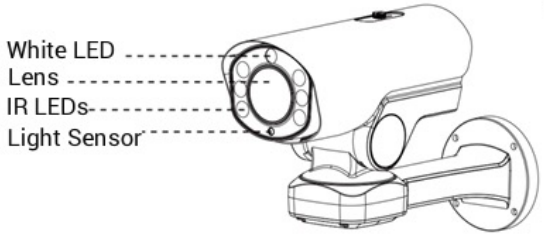

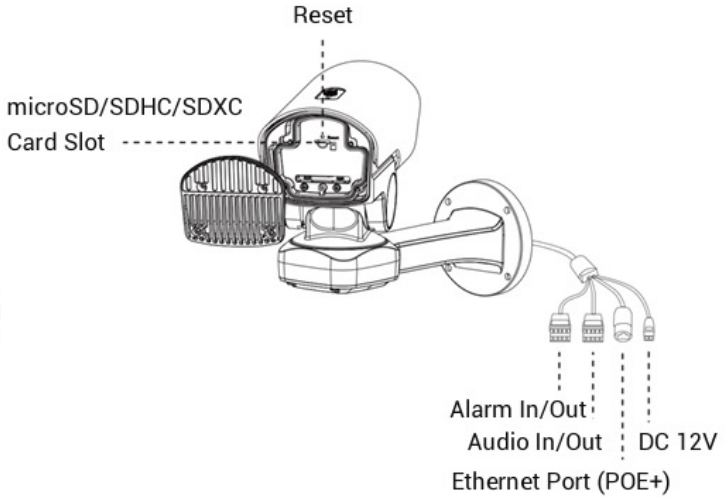

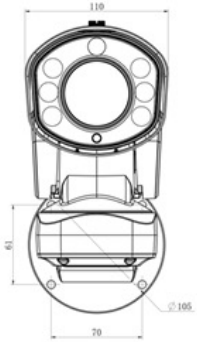

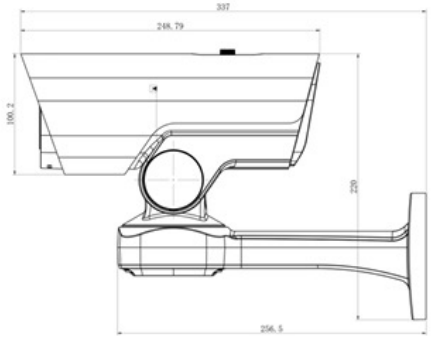

AI 23X PTZ Bullet Network Camera | Dimensions

Architecture diagram

AI 23X PTZ Bullet Network Camera | Infrastructure

- IP Camera (GK5367C-X23-PE)
- Switch HUB (PoE)
- NVR
- VMS Software
- APP (iOS&Android)
- Internet (ISP modem)

Infrastructure

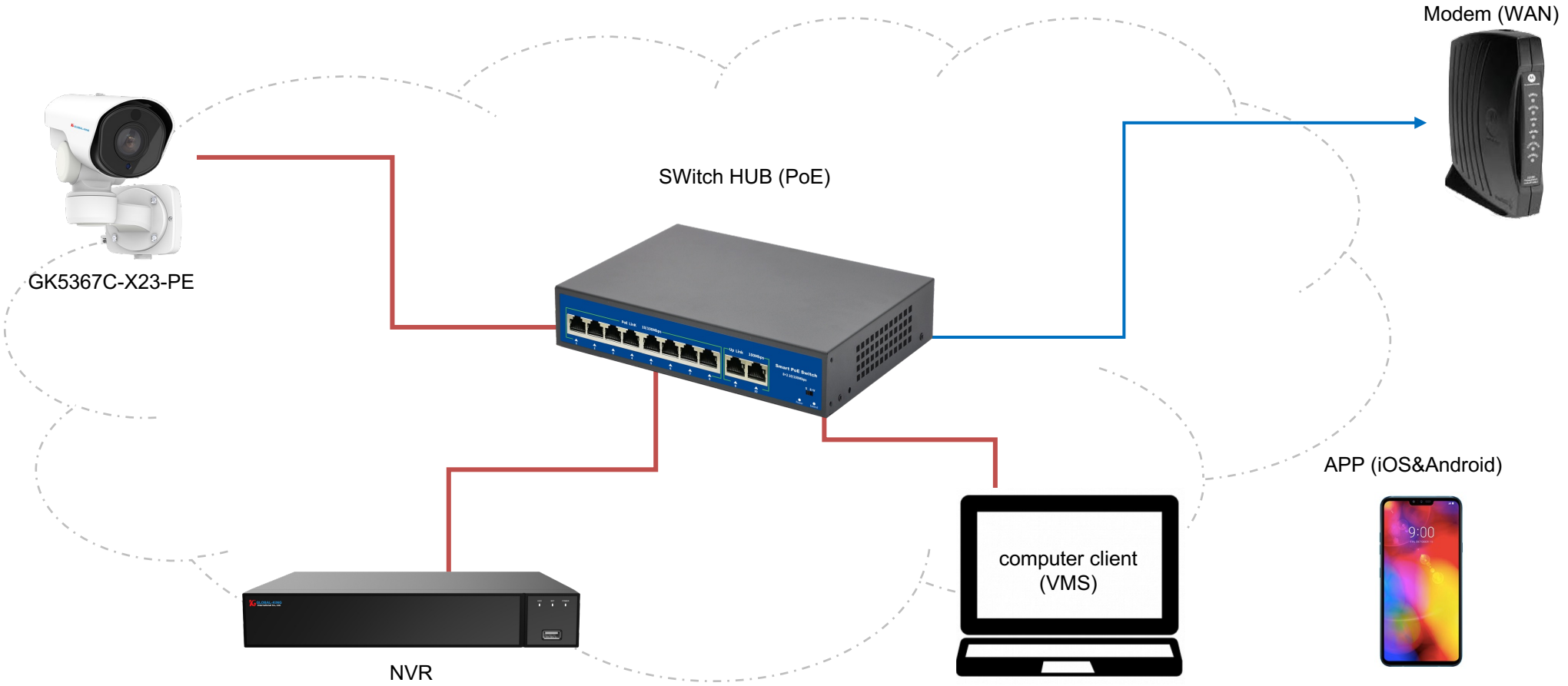

AI 23X PTZ Bullet Network Camera | Infrastructure

Thank You

2026/3/3

+886-2-77303779

service@global-king.com

www.global-king.net