GLOBAL-KING
International Co., Ltd.

Global-King Network Camera

AI 30X Speed Dome Network Camera

Feature

Model：GK2941C-X30-R(T)PE

Feature

- NDAA Compliance
- AI Deep Learning
- Flexible Pan, Tilt and Zoom Tasks
- Smart Rain-Sensing Wiper (Optional)
- PTZ Auto Tracking
- 30X Optical Zoom
- 200m IR Distance (Wiper version up to 300m)

Specification

Products Specification

Model	GK2941C-X30-R(T)PE
Image Sensor	1/2.8" Progressive Scan CMOS
Min. Illumination	Color: 0.005Lux @F1.5 | B/W: 0Lux with IR on
WDR	140dB Super WDR
Shutter Time	1~1/100,000s
DORI Distance	D：82.5~2020m | O：32.5~796m | R：16~398m | I: 8~199m
Day/Night Mode	Day | Night | Auto | Customize | Schedule
S/N	>55dB
Digital Zoom	16X
Lens	4.7~141mm | 30X Optical Zoom
Zoom Speed	Approx. 6s (Wide-Tele)
Field of View	H62°~H2.3° | D70°~D2.7° | V37°~V1.3°
Focus Control	Auto | Semi-Auto | Manual
Minimum Working Distance	100/1500mm (Wide/Tele)
Aperture	F1.5~F4.0
Iris Control	Auto
Pan Range/Pan Speed	360°endless | Pan Manual Speed：0.1°~250°/s | Pan Preset Speed：250°/s
Tilt Range/Tilt Speed	-5°~90°(Auto Flip) | Tilt Manual Speed：0.1°~160°/s | Tilt Preset Speed：160°/s
Proportional Zoom	Support
Preset Quantity	300
Patrol	8 Patrols, up to 48 presets each patrol
Pattern	4 Patterns
Auto Tracking	Support
Power Off Memory	Support

Other Function	Auto Scan｜Auto Home｜Preset Freezing｜3D Positioning｜PTZ Limits｜Initial Position
IR Distance	Up to 200m｜Up to 300m (Wiper Version)
Irradiation Angle	Auto｜Manual
Resolution	1920(H) x 1080(V)
Primary Stream	60Hz：90fps@(1920x1080)(Optional for T Series)｜60fps@(1920x1080｜1280x960｜1280x720｜704x576) 50Hz：90fps@(1920x1080)(Optional for T Series)｜50fps@(1920x1080｜1280x960｜1280x720｜704x576)
Secondary Stream	60Hz：60fps@(704x576｜640x480｜640x360｜352x288｜320x240) 50Hz：50fps@(704x576｜640x480｜640x360｜352x288｜320x240)
Tertiary Stream	60Hz：30fps@(1920x1080｜1280x720｜704x576｜640x480｜640x360｜320x240) 50Hz：25fps@(1920x1080｜1280x720｜704x576｜640x480｜640x360｜320x240)
Video Compression	H.265+｜H.265(HEVC)｜H.264+｜H.264｜MJPEG
Video Bit Rate	16Kbps~16Mbps (CBR/VBR adjustable)
Privacy Masking	Up to 8 Areas (Mask Area and Mosaic Area are optional)
ROI	Up to 8 areas
Image Settings	Saturation｜Brightness｜Contrast｜Sharpness
Image Enhancement	BLC｜HLC｜2D DNR｜3D DNR｜AGC｜Defog｜AWB｜Deblur｜Anti-flicker｜Corridor Mode, LDC
Ethernet	1xRJ45 10M/100M Ethernet Port
Audio I/O	1CH｜1CH
Alarm I/O	4CH｜2CH
RS485	Support
Network Storage	NAS (Support NFS /SMB /CIFS)｜ANR
Network Protocols	IPv4/IPv6｜ARP｜TCP｜UDP｜RTCP｜RTP｜RTSP｜RTMP｜HTTP｜HTTPS｜DNS｜DDNS｜DHCP｜FTP｜NTP｜SMTP｜SNMP｜ UPnP｜Bonjour｜LLDP｜SIP｜VPN｜PPPoE｜VLAN｜802.1x｜QoS｜IGMP｜ICMP｜SSL｜TLS1.2
Audio Compression	G.711｜AAC｜G.722｜G.726

Audio Sampling Rate	8 /16 /32 /44.1 /48KHz
Audio Bit Rate	16~256kbps
Video Analysis	VCA 2.0：Intrusion Detection｜Region Entrance｜Region Exiting｜Advanced Motion Detection｜Line Crossing｜Loitering｜Object Left｜Object Removed
Attribute Extraction	Simultaneously detect up to 50 targets and capture humans and vehicles in real time｜Recognize attributes including Upper and Lower Clothing Color, Hat, and Vehicle Types (Bicycle｜Car｜Motorcycle｜Bus｜Truck｜E-scooter)
Face Detection & Face Attribute Recognition	Detect and capture faces, get real-time snapshots｜The attributes include Age, Gender, Glasses, Mask and Cap｜Support Faces Privacy Mode, the detected faces in the face detection area will be mosaic automatically
Object Counting & Report	Count the number of objects crossing the line, optionally human and vehicle｜Support regional people counting for up to 4 detection areas
Basic Event	Motion Detection｜Tamper Detection｜External Output｜External Input｜Audio Alarm, etc.
Exception	Network Disconnection｜IP Address Filtering｜Record Failed｜SD Card Full｜SD Card Uninitialized｜SD Card Error｜No SD Card
Event Action	FTP Upload Record｜Snapshot ｜SMTP Upload Record｜SD Card Record｜SIP Phone｜Play Audio｜PTZ Motion｜HTTP Notification, etc.
Watermark	Support
Storage	Support microSD/SDHC/SDXC Card Local Storage｜up to 1TB
SIP/VoIP	Yes｜Voice & Video-over-IP
System Compatibility	ONVIF Profile (Support G/M/S/T)｜API
Working Condition	-40ºC~60ºC｜0~90%(Non-condensing)
Power Supply	PoE (802.3at)｜AC24V3A±10%
Power Consumption	Min.：12.5W (DC 24V / AC 24V) / 17.6W(PoE)｜Max.：23W (DC 24V / AC 24V) / 28W(PoE)
Surge Protection	6KV
Dimensions & Weight	⌀205 x 308 mm｜4Kg
Certification	CE｜FCC｜IP67｜IK10｜NDAA

Information correct as of print.
Slight specification variations may occur due to product enhancement to optimize functionality

Accessories

Product Accessories

A02 V2 Pole Mount

Weight: 1kg
Dimension: 180*138.5*47mm
Installation Environment: For strapping cameras on poles between ϕ67–127 mm (2.6–5 inches) in diameter

A03 External Corner Bracket

Weight: 900g
Dimension: 180*152.5*76mm
Installation Environment: For mounting cameras on an external corner

A41 Wall Mount

Weight: 400g
Dimension: 200*129*100mm
Installation Environment: For wall or parapet installations

A42 Pendant Mount

Weight: 650g
Dimension: Φ 116.5*255mm
Installation Environment: Used to install cameras on a ceiling or vertical structure

A42-L Extension Lever

Weight: 330g
Dimension: Φ 47.5*255mm
Installation Environment: Used as extensions for pendant mount

A43 Junction Box

Weight: 1000g
Dimension: 195*164*80mm
Installation Environment: For the containing of electrical connections which need to be concealed from sight and deter tampering

Dimension

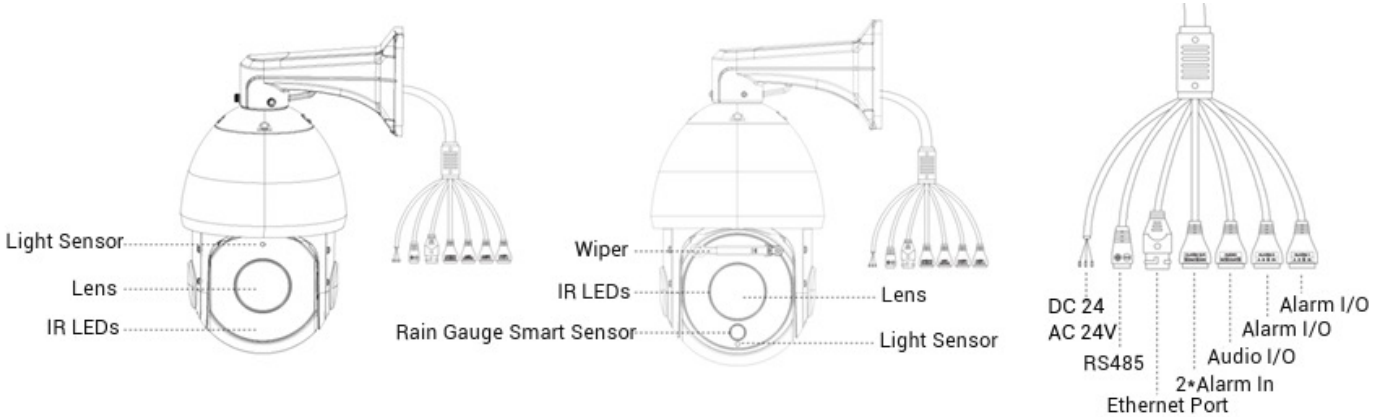

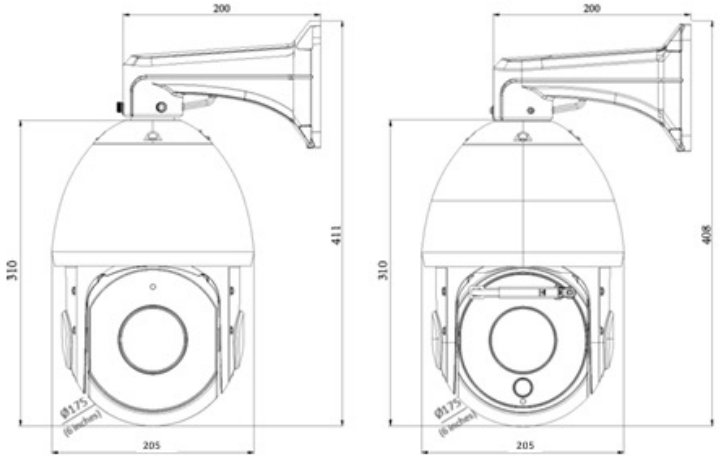

Wall Mount

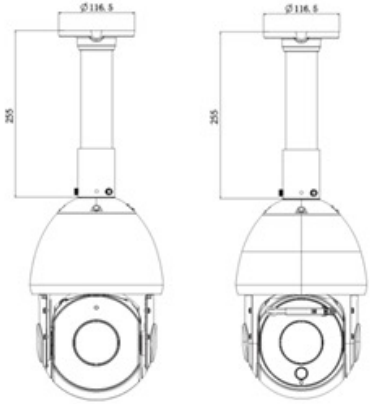

Ceiling Mount

AI 30X Speed Dome Network Camera | Dimensions

Architecture diagram

AI 30X Speed Dome Network Camera | Infrastructure

- IP Camera (GK2941C-X30-R(T)PE)
- Switch HUB (PoE)
- NVR
- VMS Software
- APP (iOS&Android)
- Internet (ISP modem)

Infrastructure

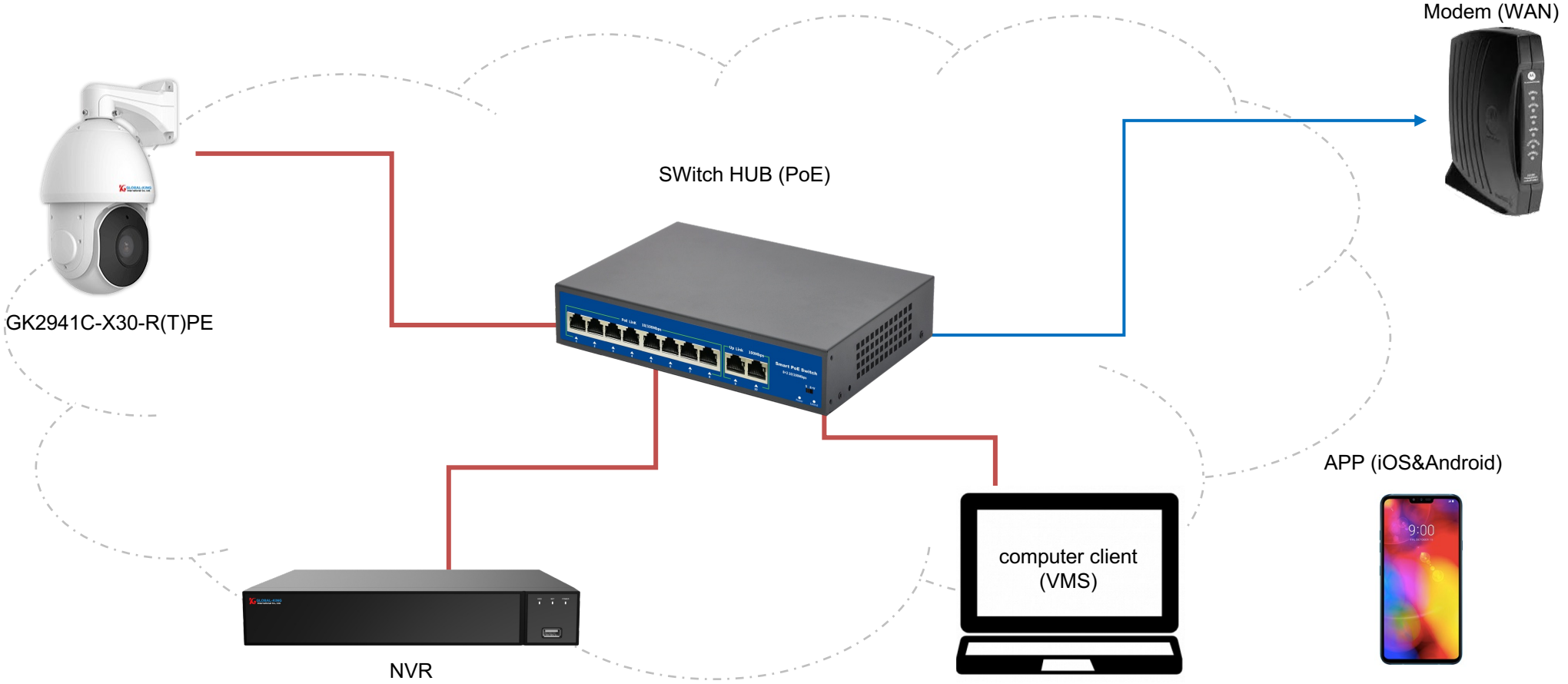

AI 30X Speed Dome Network Camera | Infrastructure

Thank You

2026/3/2

+886-2-77303779

service@global-king.com

www.global-king.net