

GLOBAL-KING
International Co., Ltd.

Global-King 5G Camera

5G AIoT 4X Pro Bullet Plus Network Camera



Feature

Model：GK8266C-X4-GOPC

Feature

- NDAA Compliance
- Up to 4K High Resolution
- AI Deep Learning
- 5G Technology
- IoT Connection
- 4X Optical Zoom
- 1/1.8" STARVIS Starlight Sensor
- 30fps
- IP67



Specification

Products Specification

Model	GK8266C-X4-GOPC
Image Sensor	1/1.8″ Progressive Scan CMOS
Min. Illumination	Color：0.009Lux@F1.6 | B/W：0Lux with IR on
WDR	120dB Super WDR
Shutter Time	1~1/100,000s
Day/Night Mode	Day | Night | Auto | Customize | Schedule
IR Distance	Up to 180m
S/N	>55dB
Lens	
Lens	8~32mm | 4X Optical Zoom
Field of View	H44°~H13° | D51°~D15° | V25°~V7°
Focus Control	Auto | Manual
Aperture	F1.6-F1.7
Iris Control	Auto
Video	
Max.Image Resolution	3840(H) x 2160(V)
Primary Stream	60Hz：30fps@(3840x2160 | 3072x2048 | 2592x1944 | 2592x1520 | 2048x1536 | 1920x1080 | 1280x960 | 1280x720 | 704x576) 50Hz：25fps@(3840x2160 | 3072x2048 | 2592x1944 | 2592x1520 | 2048x1536 | 1920x1080 | 1280x960 | 1280x720 | 704x576)
Secondary Stream	60Hz：30fps@(704x576 | 640x480 | 640x360 | 352x288 | 320x240 | 320x192 | 320x180) 50Hz：25fps@(704x576 | 640x480 | 640x360 | 352x288 | 320x240 | 320x192 | 320x180)
Tertiary Stream	60Hz：30fps@(1920x1080 | 1280x720 | 704x576 | 640x480 | 640x360 | 320x240 | 320x192 | 320x180) 50Hz：25fps@(1920x1080 | 1280x720 | 704x576 | 640x480 | 640x360 | 320x240 | 320x192 | 320x180)
Video Compression	H.265+ | H.265 (HEVC) | H.264+ | H.264 | MJPEG
Video Bit Rate	16Kbps~16Mbps (CBR/VBR adjustable)
Privacy Masking	Up to 28 areas (24 mask areas and 4 mosaic areas)

ROI	Up to 8 areas
Image Settings	Saturation | Brightness | Contrast | Sharpness
Web Access	Support IE | Firefox | Chrome | Safari Browser
Audio	
Audio Compression	G.711 | AAC | G.722 | G.726
Audio Sampling Rate	8 | 16 | 32 | 44.1 | 48KHz
Audio Bit Rate	16~256kbps
Two-way Audio	Support
Interface	
Ethernet	1xRJ45 10M/100M Ethernet Port
Audio I/O	1CH | 1CH
Alarm I/O	1CH | 1CH
Mobile Communication Parameter	
Wireless Communication	5G | 4G | 3G
Frequency Bands	5G NR：n1 /n2 /n3 /n5 /n7 /n8 /n12 /n20 /n28 /n41 /n66 /n71 /n77 /n78 /n79 LTE-FDD：B1 /B2 /B3 /B4 /B5 /B7 /B8 /B9 /B12 /B13 /B14 /B17 /B18 /B19 /B20 /B21 (TBD) /B25 /B26 /B28 /B29 /B30 /B32 /B66 /B71 LTE-TDD：B34 /B38 /B39 /B40 /B41 /B42 /B48 LAA：B46 WCDMA：B1 /B2 /B3 /B4 /B5 /B6 /B8 /B19
Wireless Transmission Speed	SA：DL 3.3Gbps / UL 250Mbps NSA：DL 3.4Gbps / UL 200Mbps LTE：DL 2.0Gbps / UL 150Mbps WCDMA：DL 42Mbps / UL 5.76Mbps GNSS：GPS /GLONASS /BeiDou /Galileo
SIM Card	Nano SIM
LoRaWAN®	

Antenna	1x50ΩSMA-Female External Antenna Connector
Channel	8 channels simultaneously
Demodulation	1Mhz
Frequency Band	CN470 /IN865 /EU868 /RU864 /US915 /AU915 /KR920 /AS923 /AS923-2
Sensitivity	-140dBm Sensitivity @292bps
Output Power	27dBm Max
Protocol	V1.0 Class A /Class B /Class C | V1.0.2 Class A /Class B /Class C
Communication Range	Up to 15km
Network	
Network Storage	NAS (Support NFS / SMB / CIFS) | ANR
Network Protocols	IPv4/IPv6 | ARP | TCP | UDP | RTCP | RTP | RTSP | RTMP | HTTP | HTTPS | DNS | DDNS | DHCP | FTP | NTP | SMTP | UPnP | Bonjour | SIP | SNMP | PPPoE | VLAN | 802.1x | QoS | IGMP | ICMP | SSL
Intelligent Analytics	
Video Analysis	Region Entrance | Region Exiting | Advanced Motion Detection | Tamper Detection | Line Crossing | Loitering | Object Left | Object Removed
Face Detection	Detect and capture faces, get real-time snapshot
People Counting& Report	Count the number of people entering or exiting | up to 4 detection areas for regional people counting
System	
Storage	Support microSD/SDHC/SDXC Card Local Storage | up to 256G
Advanced Function	Heat Ma | BLC | HLC | 2D DNR | 3D DNR | Defog | AWB | EIS | IP Address Filtering | AGC | Anti-flicker | Corridor Mode | Deblur | Watermark
SIP/VoIP	Yes | Voice & Video-over-IP
Event Trigger	IoT Sensor Alarm | Motion Detection | Network Disconnection | External Input | Audio Alarm, etc.
Event Action	FTP Upload | SMTP Upload | SD Card Record | External Output | SIP Phone | HTTP Notification, etc

System Compatibility	ONVIF Profile G & Q & S & T | API
General	
Working Temperature	-40ºC ~ +60ºC
Working Humidity	0~90% (Non-condensing)
Power Supply	PoE (802.3at) | DC12V±10%
Power Consumption	12W MAX | 18W MAX (with LED on)
Surge Protection	4KV
Dimensions	320 x 134 x 126mm | 320 x 134 x 292mm (With 5G Antennas)
Weight	1636g
Certification	CE | FCC | IP67 | NDAA

Information correct as of print.
Slight specification variations may occur due to product enhancement to optimize functionality

Accessories

Product Accessories



A02 V2 Pole Mount

Weight: 1kg
Dimension: 180*138.5*47mm
Installation Environment: For strapping cameras on poles between ϕ67–127 mm (2.6–5 inches) in diameter



A03 External Corner Bracket

Weight: 900g
Dimension: 180*152.5*76mm
Installation Environment: For mounting cameras on an external corner



A62 Junction Box

Weight: 510g
Dimension: 134*126*40mm
Installation Environment: For the containing of electrical connections which need to be concealed from sight and deter tampering

Dimension



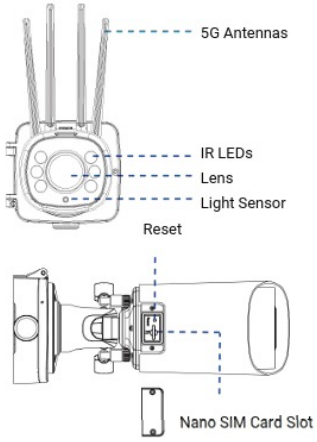

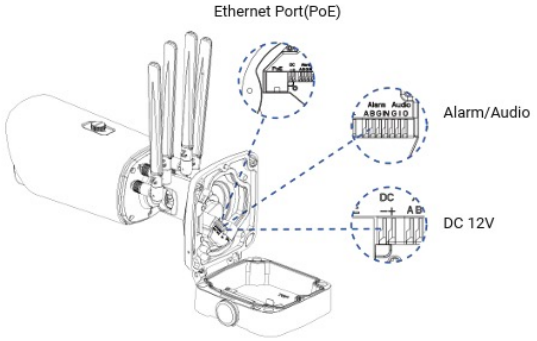

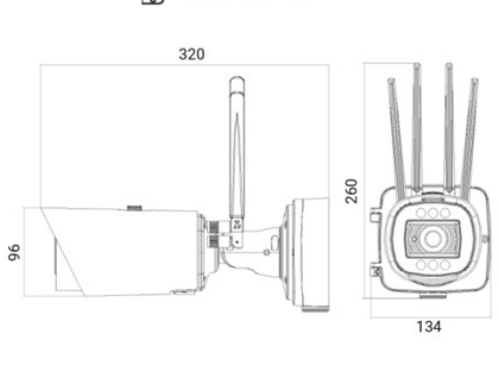

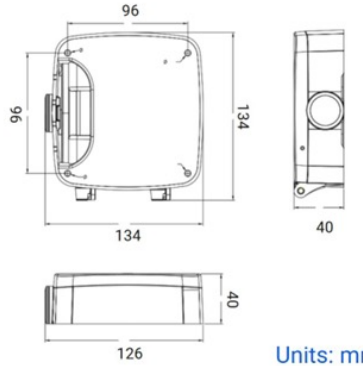

5G AIoT 4X Pro Bullet Plus Network Camera | Dimensions

Architecture diagram

5G AIoT 4X Pro Bullet Plus Network Camera | Infrastructure

- IP Camera (GK8266C-X4-GOPC)
- WiFi Router
- NVR
- VMS Software
- APP (iOS & Android)
- Internet (ISP 5G modem)

Infrastructure

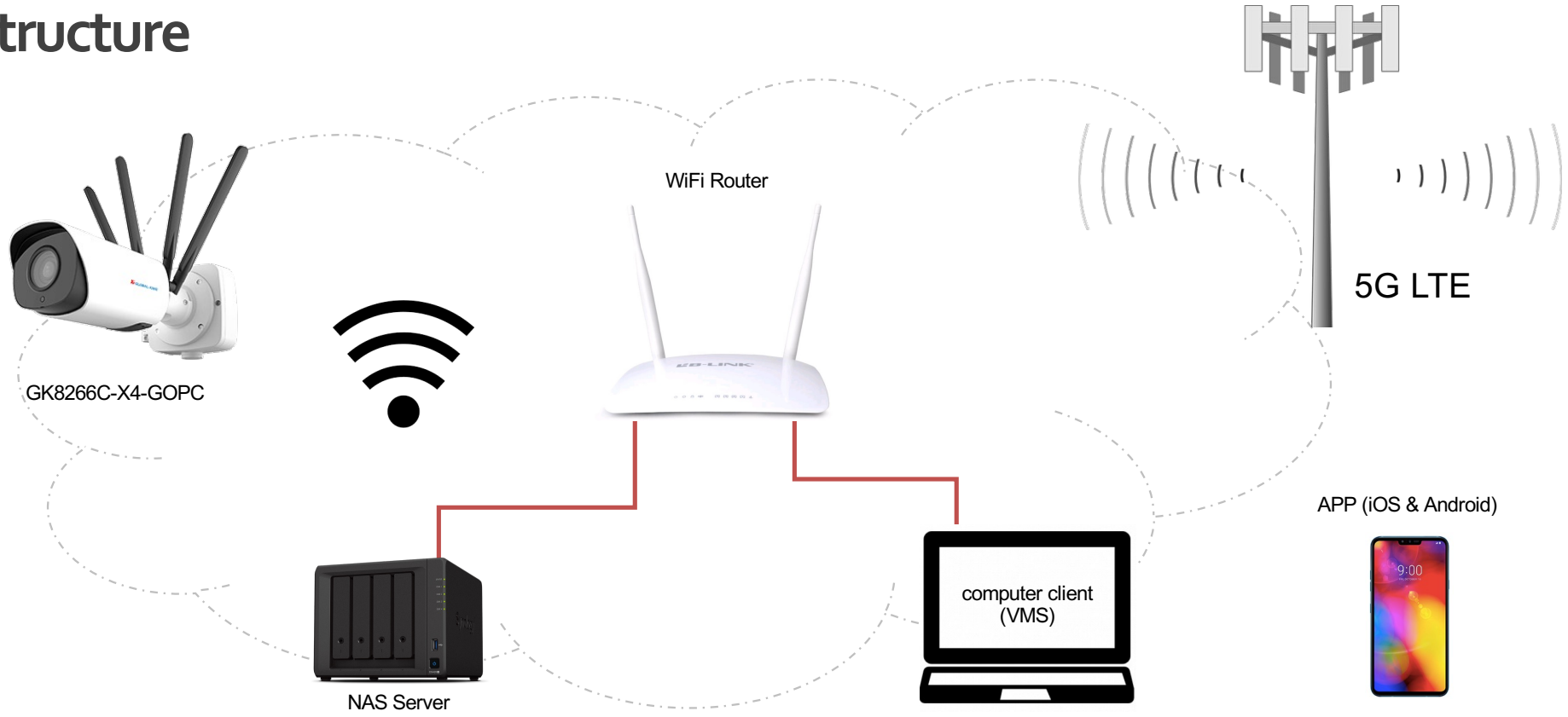

5G AIoT 4X Pro Bullet Plus Network Camera | Infrastructure



ThankYou

2026/4/7

+886-2-77303779

service@global-king.com

www.global-king.net

GLOBAL-KING
International Co, Ltd.